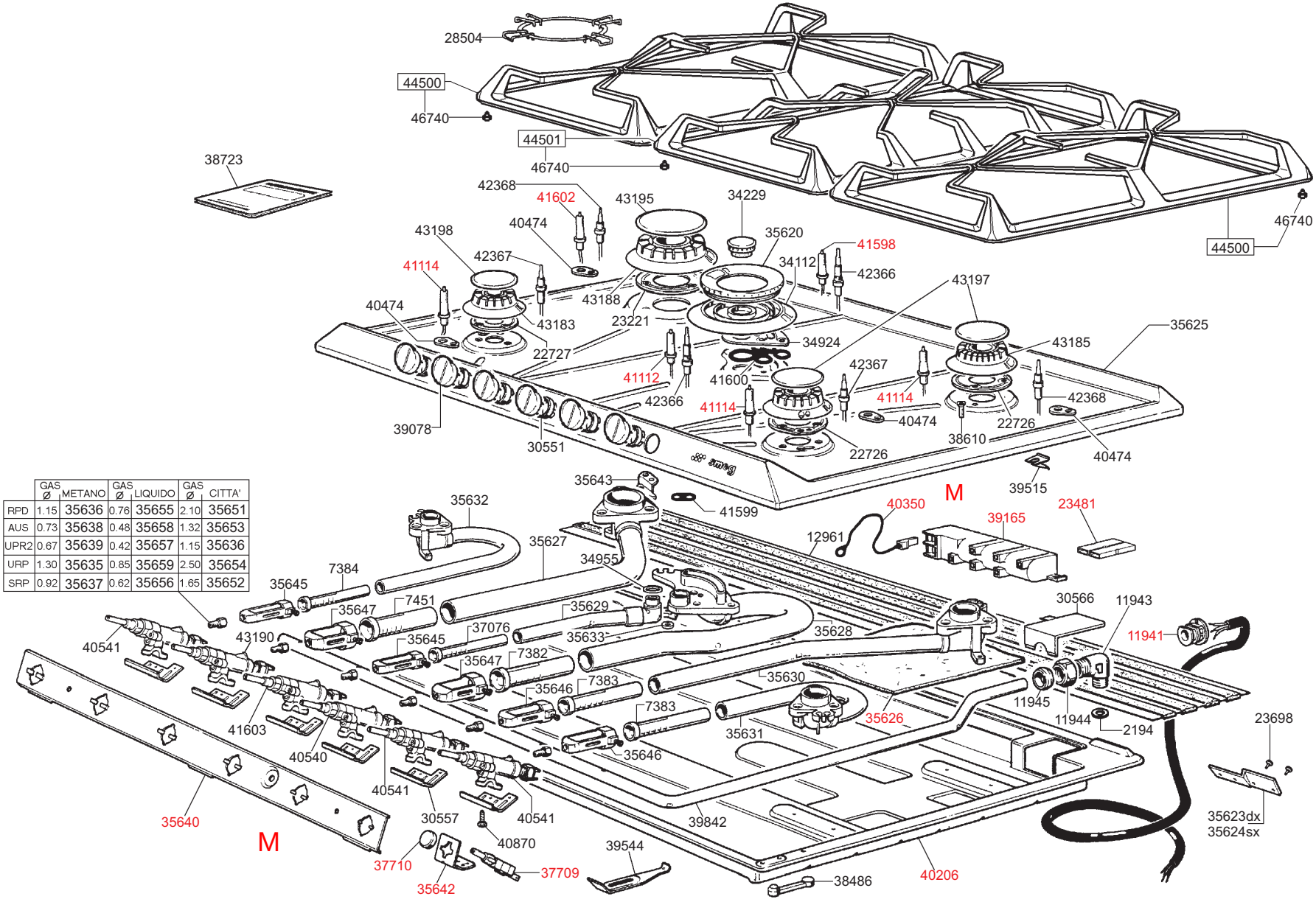

	GAS Ø	METANO	GAS Ø	LIQUIDO	GAS Ø	CITTA'
RPD	1.15	35636	0.76	35655	2.10	35651
AUS	0.73	35638	0.48	35658	1.32	35653
UPR2	0.67	35639	0.42	35657	1.15	35636
URP	1.30	35635	0.85	35659	2.50	35654
SRP	0.92	35637	0.62	35656	1.65	35652

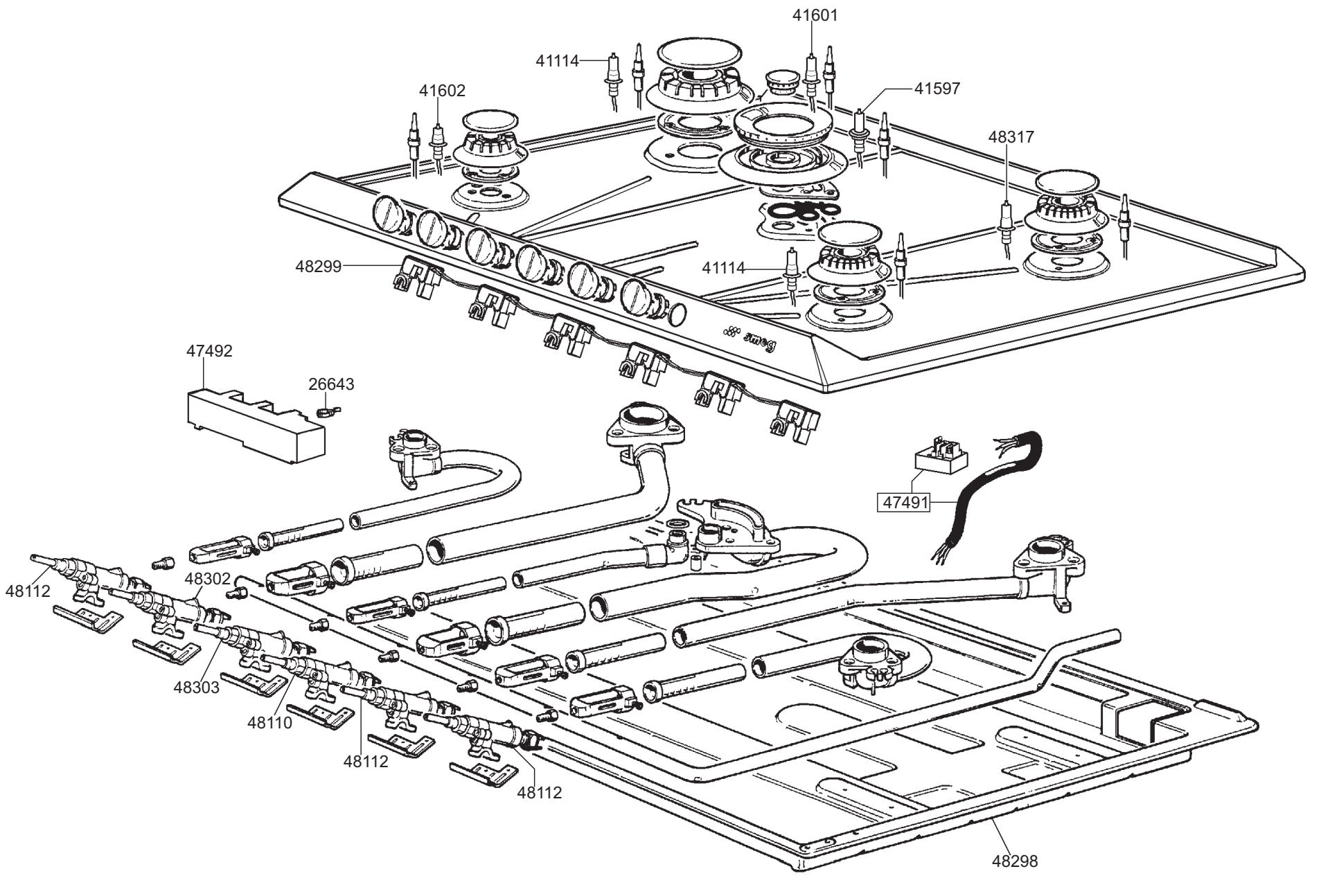
41601
41114
41602
41597
48317
48299
41114
47492
26643
47491
48112
48302
48303
48110
48112
48112
48298